ELECTRICAL, WIRE HARNESS, PERIPHERAL - Z26SPD92AN/AH/BN/BH (C750313)

2026 RZR - RZR PRO S ULTIMATE (R01) - Z26SPD92AN/AH/BN/BH

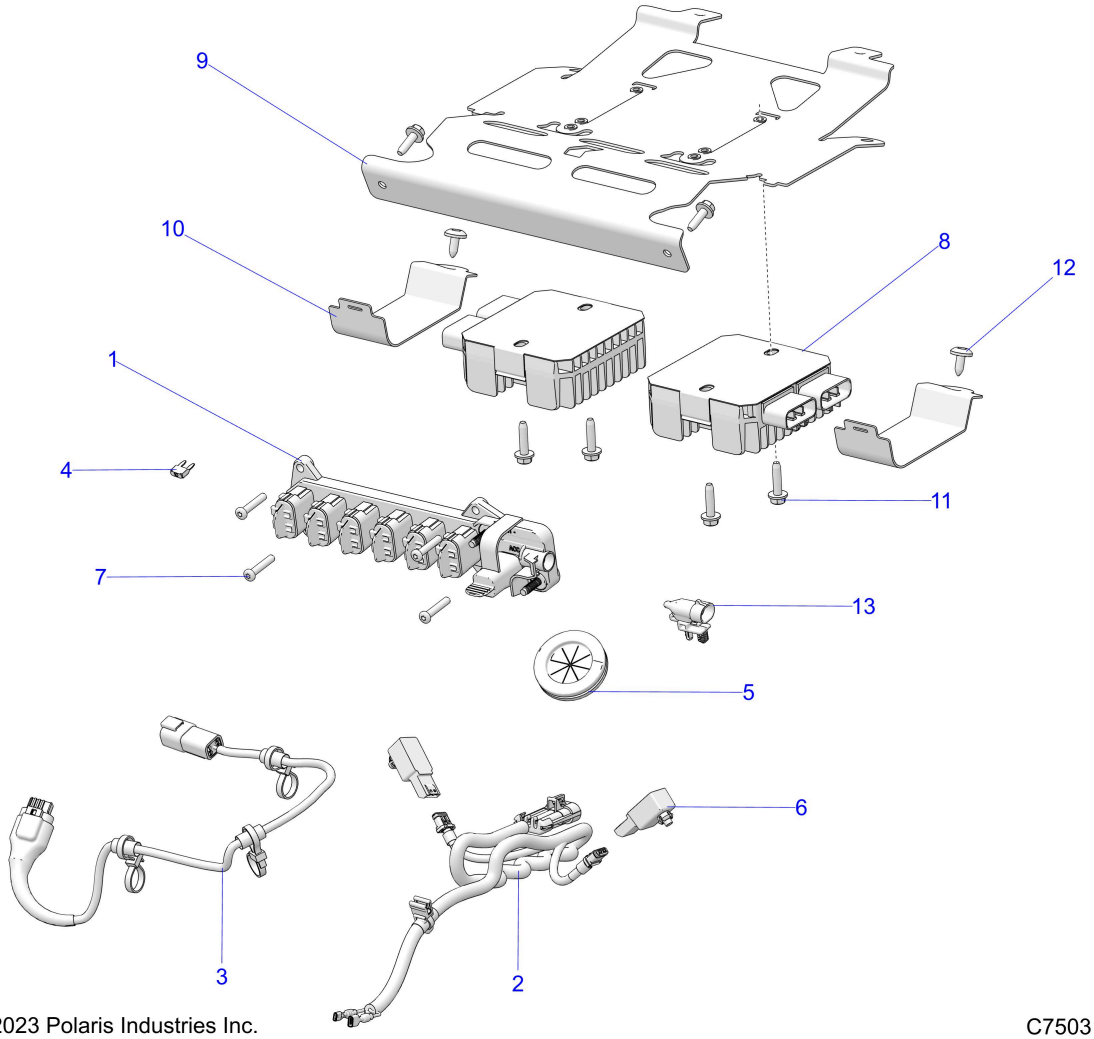

© 2023 Polaris Industries Inc. C750313

Reference #	*Part#*	*Description*	*Quantity*
1	4013891	FUSE-CARTRIDGE,40A	1
1	4016007	BLOCK-TERMINAL,3 POST,TALL	1
1	5454283	PLUG,ACCY TB	1
1	5454284	COVER,TB,JCASE	1
2	2417281	HARNESS-CONSOLE	1
3	2416468	HARN-TMAP,505MM	1
4	2434016	FUSE-IGNITION,10 AMP	1
5	5415049	GROMMET-ELEC,CAB,SLIT	1
6	2417268	ASM-LIGHT,FOOTWELL,5700K	5
7	7512078	SCR-10X1.12 TX PN PLS-Y	1
8	4016868	REGULATOR-3PH,50A,SERIES,HISPD	2
9	5274070-329	BRKT-MOUNT,REGULATOR,ECOAT	1
10	5274949-329	BRKT-MOUNT,REGULATOR,2, BLK	2
11	7519342	SCR-TFHFL-M6X1.0X25,ZOD	4
12	7518936	SCR-M6X1X16 TR/TX-M	2
13	4018205	SENSOR-GAUGE,AIR TEMP,PNL MNT	1

Copyright 1996-2026 Polaris Industries U.S.A All rights reserved.